9" Mold Clamps

Through-hardened steel, closed end, socket or oversize hex bolt

EMI's through-hardened steel clamps last longer than less expensive case-hardened clamps. These are easy to install and are adjustable, so that no spacers are required. The washers are extra-large and hardened. Metric thread bolts are available as an option.

9" Machined Mold Clamps: Socket Head Bolt Style

	Description	Quick#	Part#	Price
	¾" -10 Platen Holes			
Total Price	**Complete Clamp Assembly**	**M448**	**87C9C34S**	$93
	9" Closed-End Clamp Only	**M449**	87C9C	$71
	¾" Non-Slip Rectangular Washer	**M450**	8734RW	$13.00
	Socket Head Bolt ¾"-10 x 4½"	**M451**	8734HA	$6.27
	Leveling Bolt 1"-8 x 2½"	**M452**	872ABA	$3.14
	1" -8 Platen Holes			
Total Price	**Complete Clamp Assembly**	**M453**	**87C9C1S**	$100
	9" Closed-End Clamp Only	**M449**	87C9C	$71
	1" Non-Slip Rectangular Washer	**M454**	871RW	$13.00
	Socket Head Bolt 1"-8 x 4½"	**M455**	871H	$14
	Leveling Bolt 1"-8 x 2½"	**M452**	872ABA	$3.14
	Options			
	Swivel-Style Leveling Bolt 1"-8 x 2½"	**M456**	871SB	$29
	1"-8 x 5½" Long Platen Bolts SHCH	**M457**	87-94	$24
	¾"-10 x 5½" Long Platen Bolts SHCH	**M447**	87-102	$14
	Metric Thread Platen Bolt – See page 191			

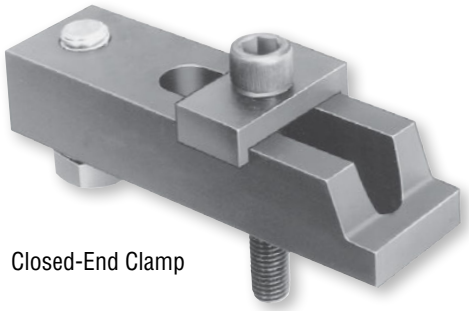

Closed-End Clamp

Options

When ordering, use Quick#s to ensure order accuracy.

9" Mold Clamps

9" Machined Mold Clamps: Oversize Hex Head Bolt Style

	Description	Quick#	Part#	Price
	¾" -10 Platen Holes			
Total Price	**Complete Clamp Assembly**	**M458**	**87C9C34SOS**	$126
	9" Closed-End Clamp Only	**M449**	87C9C	$71
	" Non-Slip Rectangular Washer	**M450**	8734RW	$13.00
	Oversize Hex Bolt "-10 x 4"	**M459**	8734OSL	$14.00
	Swiveling Leveling Bolt 1"-8 x 2½"	**M456**	871SB	$29
	1" -8 Platen Holes			
Total Price	**Complete Clamp Assembly**	**M460**	**87C9C1SOS**	$134
	9" Closed-End Clamp Only	**M449**	87C9C	$71
	1" Non-Slip Rectangular Washer	**M454**	871RW	$13.00
	Oversize Hex Bolt 1"-8 x 4"	**M461**	871OS	$21
	Swiveling Leveling Bolt 1"-8 x 2½"	**M456**	871SB	$29
	Options			
	Non-Swivel Leveling Bolt	**M452**	872ABA	$3.14
	1"-8 x 5" Long Platen Bolts OSH	**M462**	871OSL	$33
	"-10 x 5" Long Platen Bolts OSH	**M469**	87-103	$26
	Metric Thread Platen Bolt – See page 191			

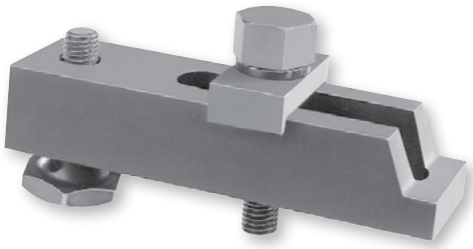

Closed-End Clamp

Options
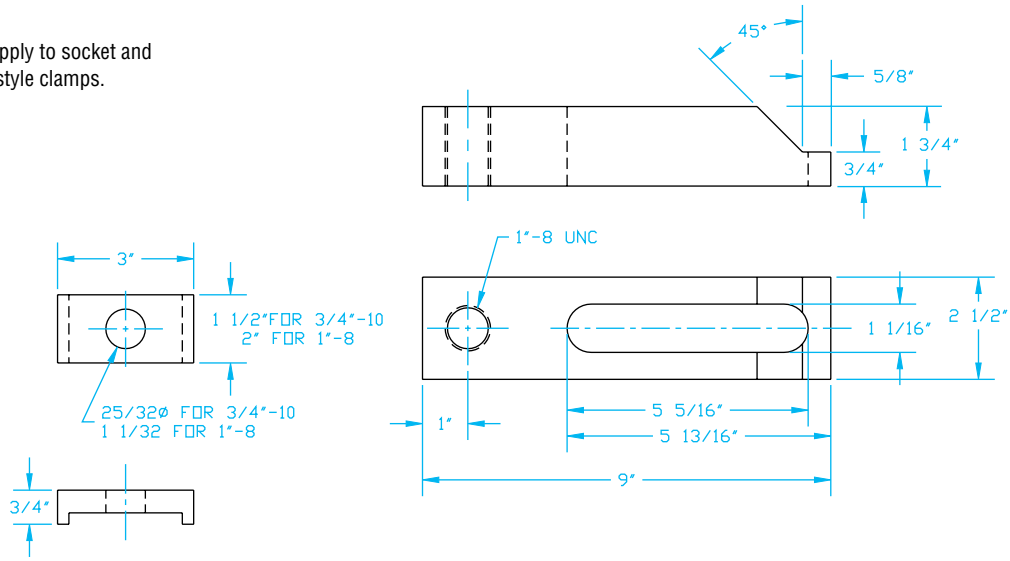
Dimensions apply to socket and oversize hex-style clamps.